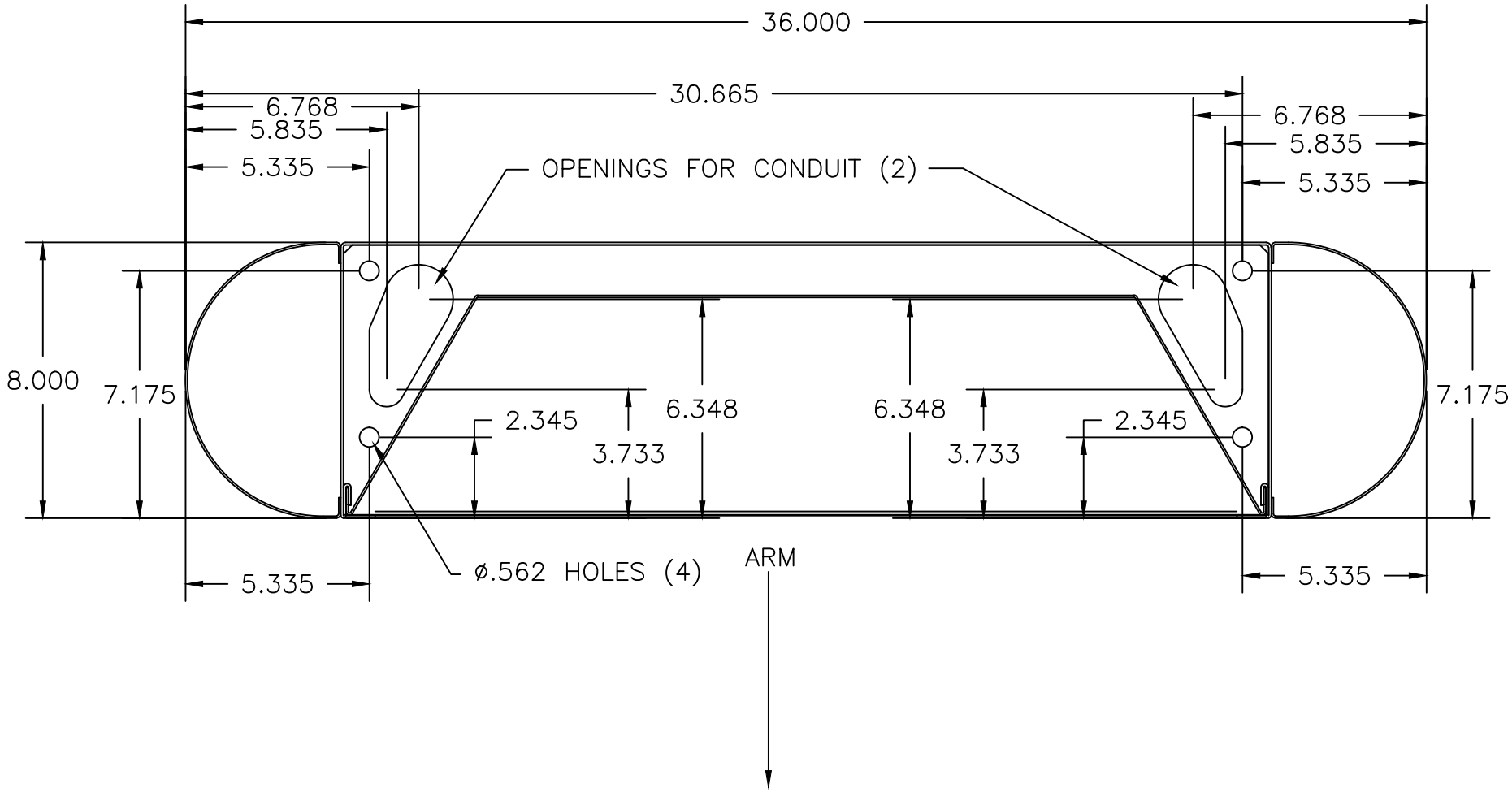


EX100-R

| | | | |
|---|---|---|---|
| MATERIAL: 304 STAINLESS STEEL | SCALE: 5=1 | APPROVED BY: | DRAWN BY: LC III |
| | DATE: 8/19/03 | | REVISED: |
| FINISH: NO. 4 SATIN | TURNSTILE - FACTORY | | 330-273-6185 FAX 330-273-4468 USA 1-800-942-0829 FAX 1-800-942-0828 |
| TOL. UNLESS OTHERWISE SPEC. .X ± .1 .XXX ± .015 .XX ± .03 ANGLES .5° | 1515 West 130th Street Hinckley, Ohio 44233 WWW.TURNSTILE-FACTORY.COM | | EXECUTIVE SERIES ROUND END FLOOR PLATE |